Partdrawing for UC011GZ - Kettingzaag
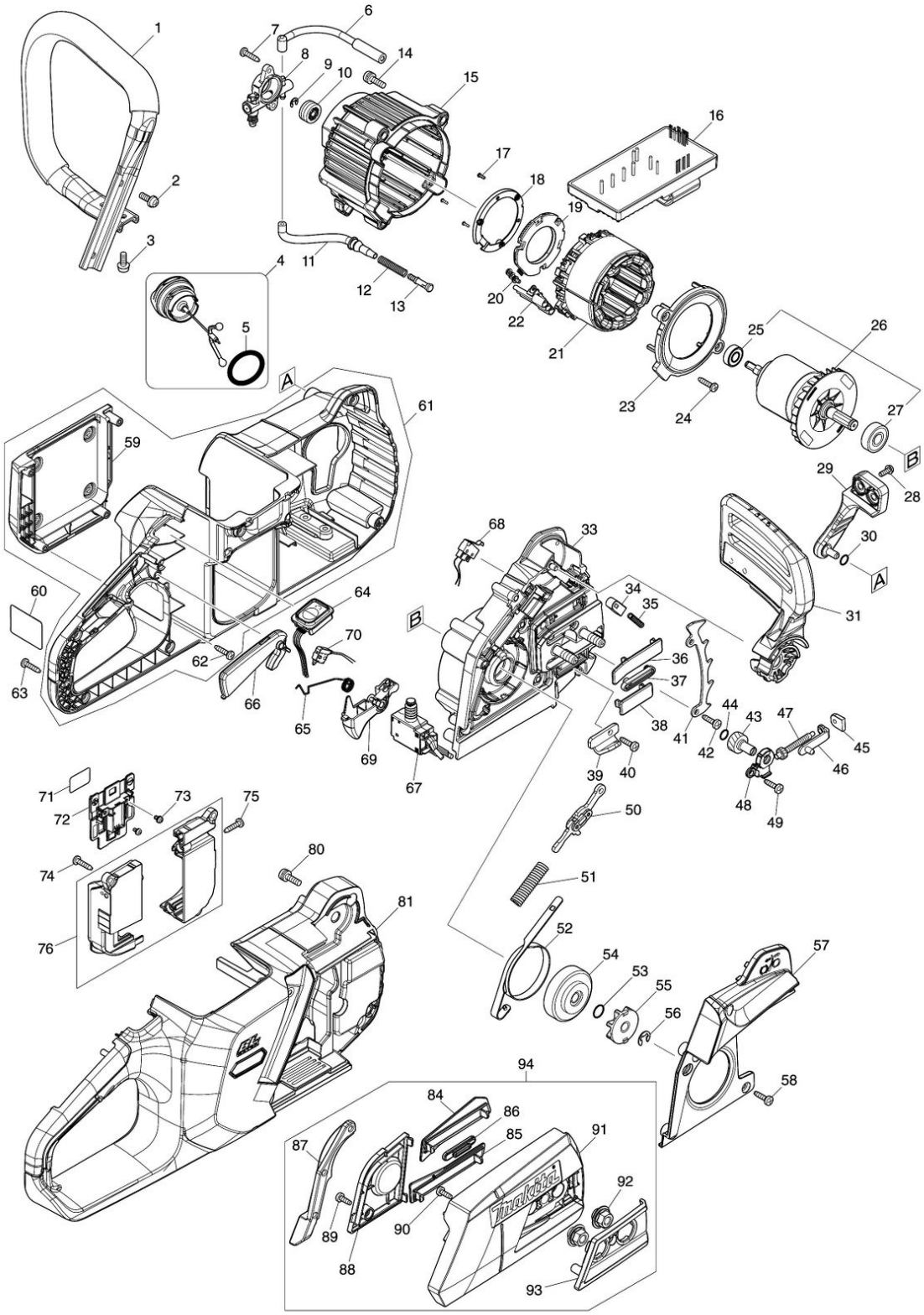
Model No.UC011G 350MM CORDLESS CHAIN SAW