Partdrawing for MLT100NX1 - Pagina 1

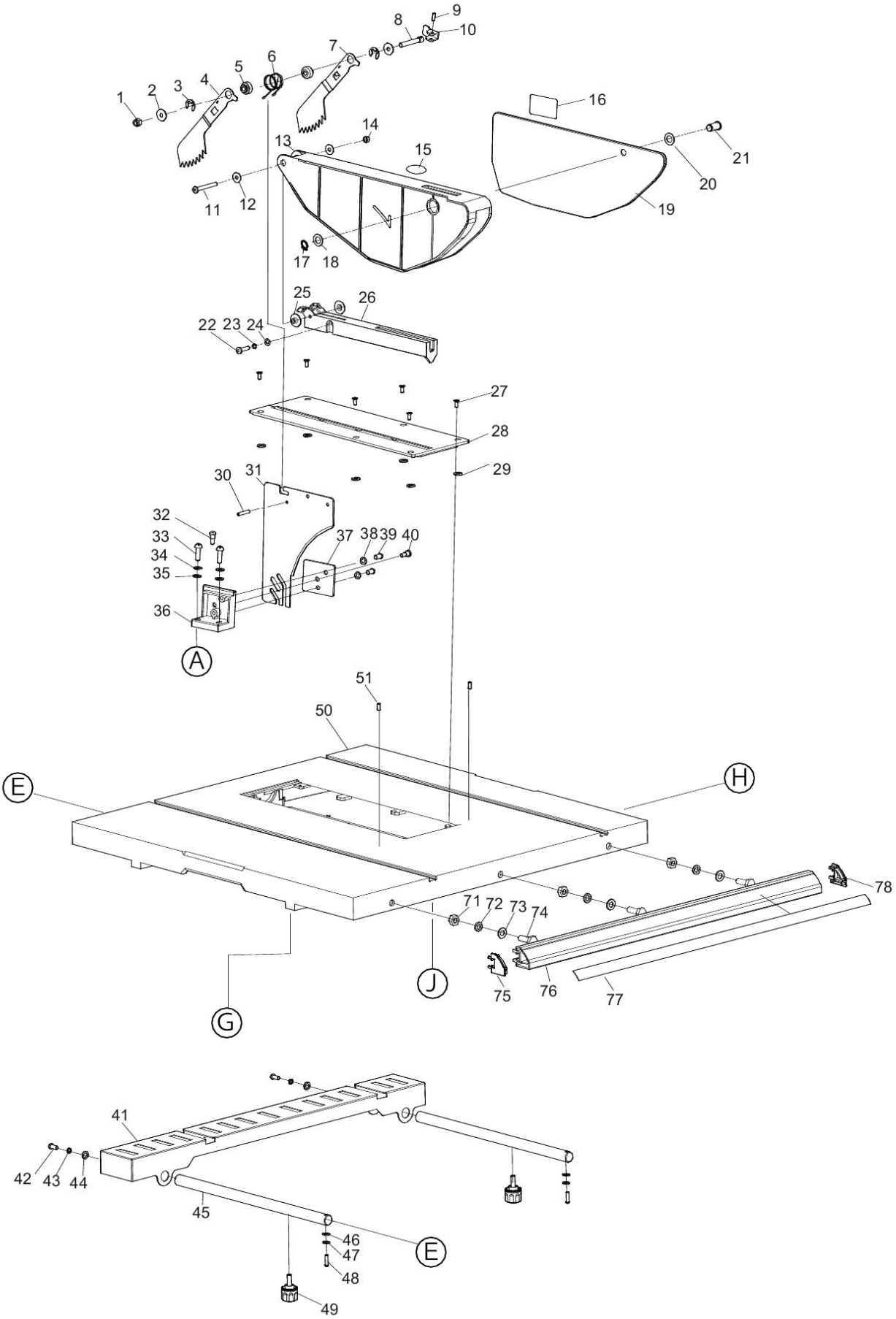

2019/10
MLT100N 1/6

Partdrawing for MLT100NX1 - Pagina 2

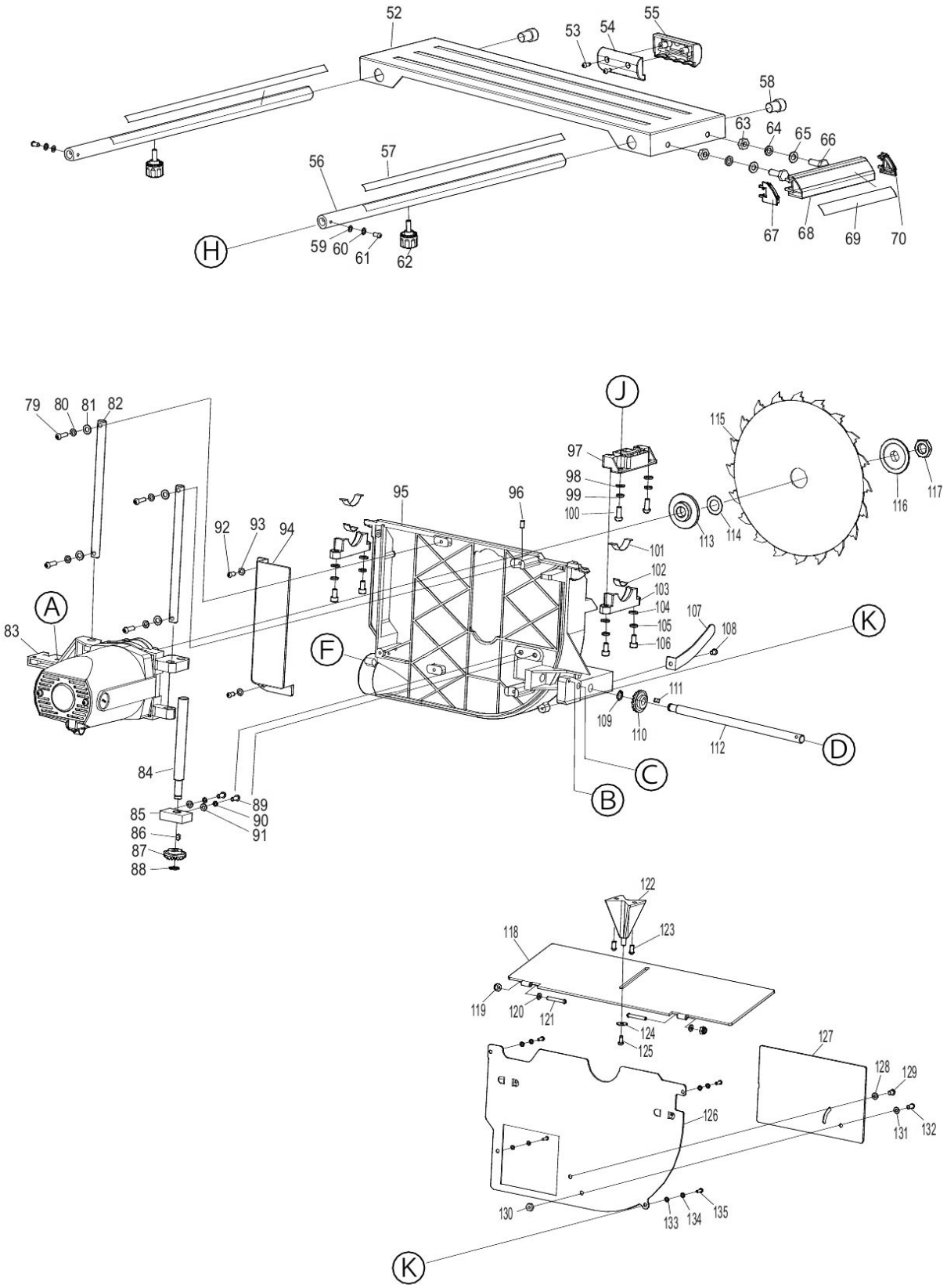

2019/10
MLT100N 2/6

Partdrawing for MLT100NX1 - Pagina 3

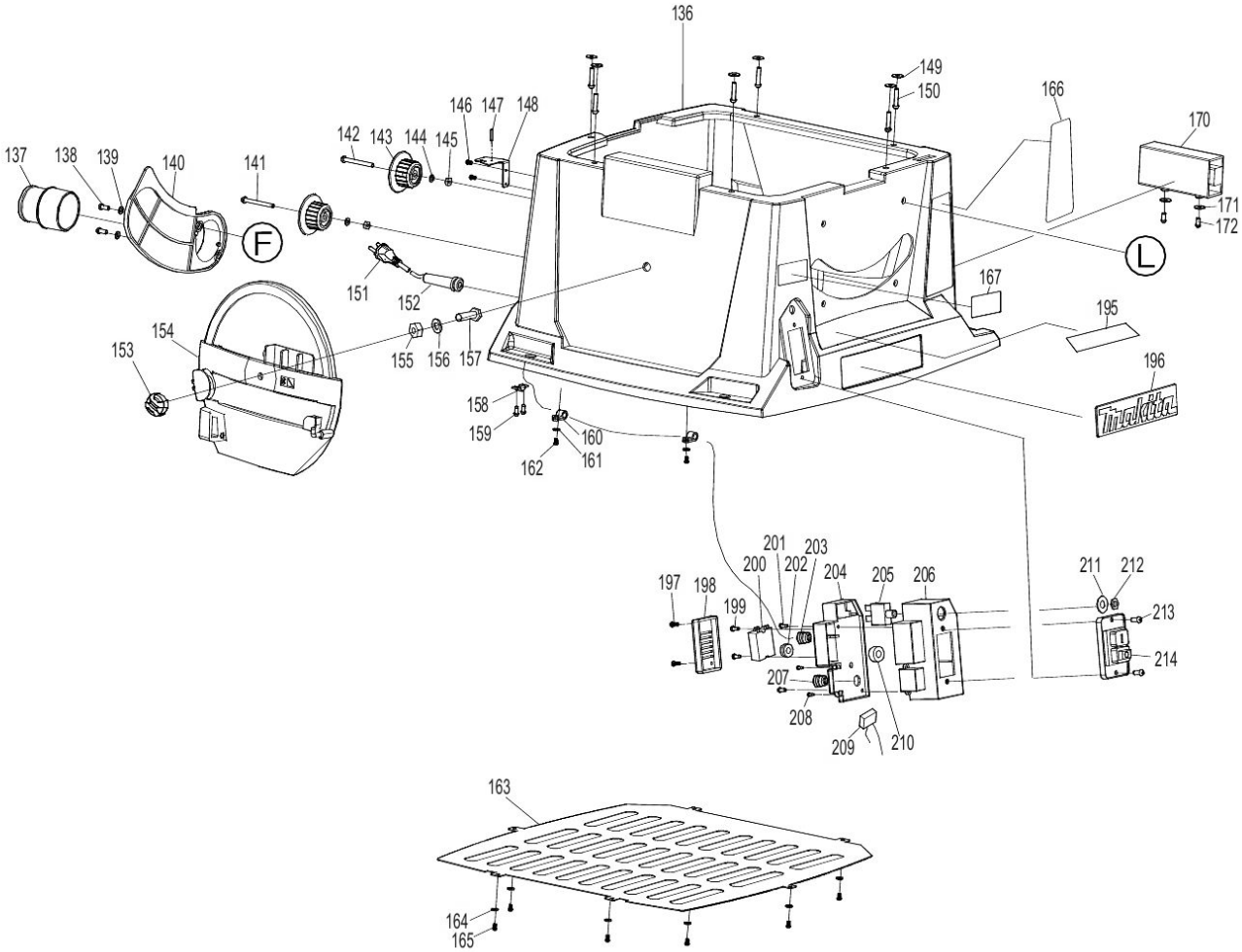

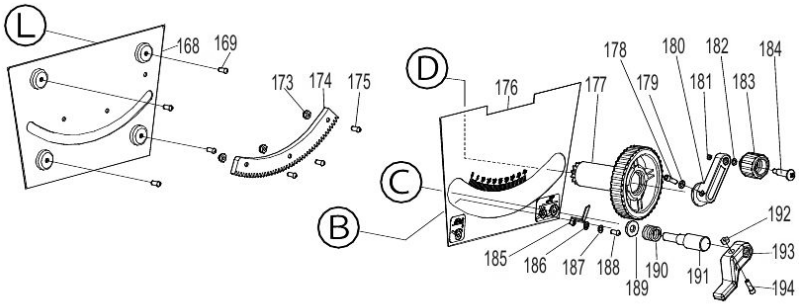

2019/10
MLT100N 3/6

Partdrawing for MLT100NX1 - Pagina 4

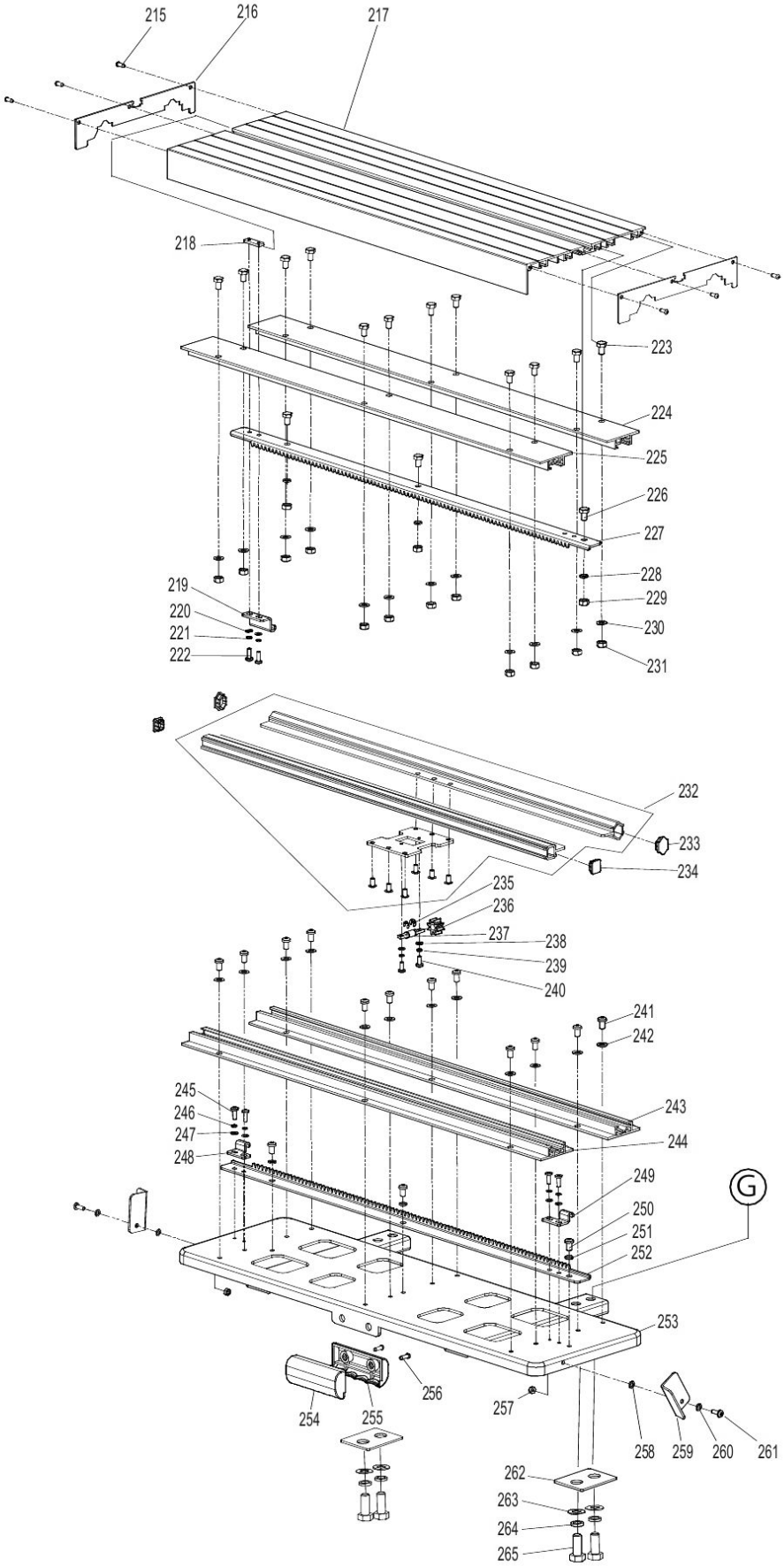

2019/10
MLT100N 4/6

Partdrawing for MLT100NX1 - Pagina 5

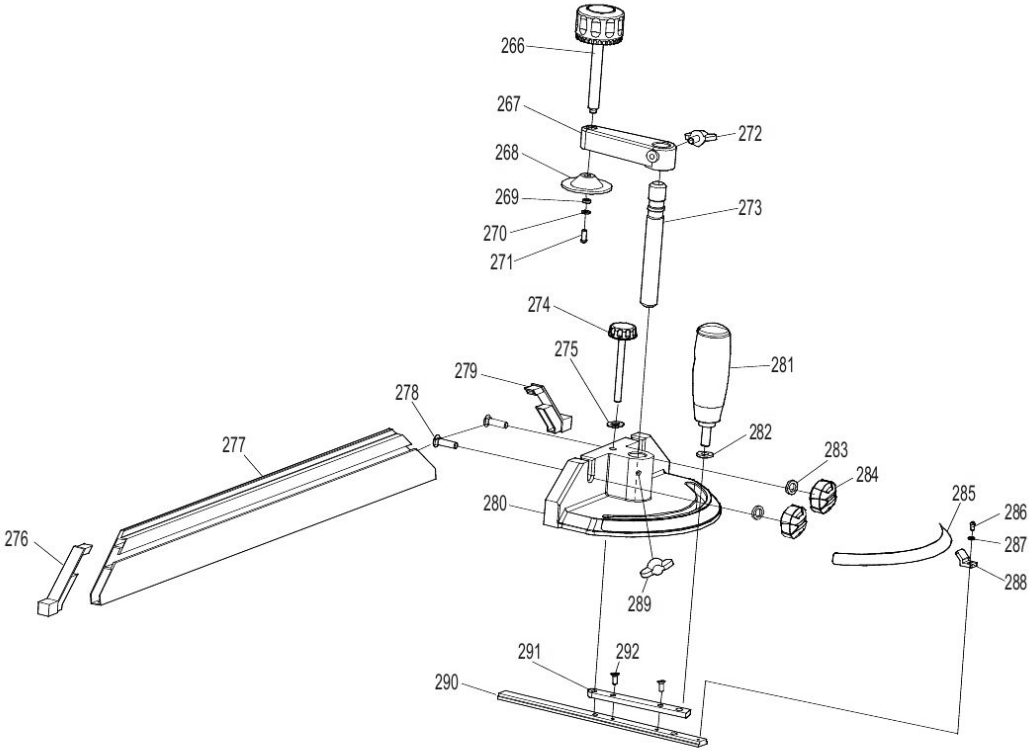

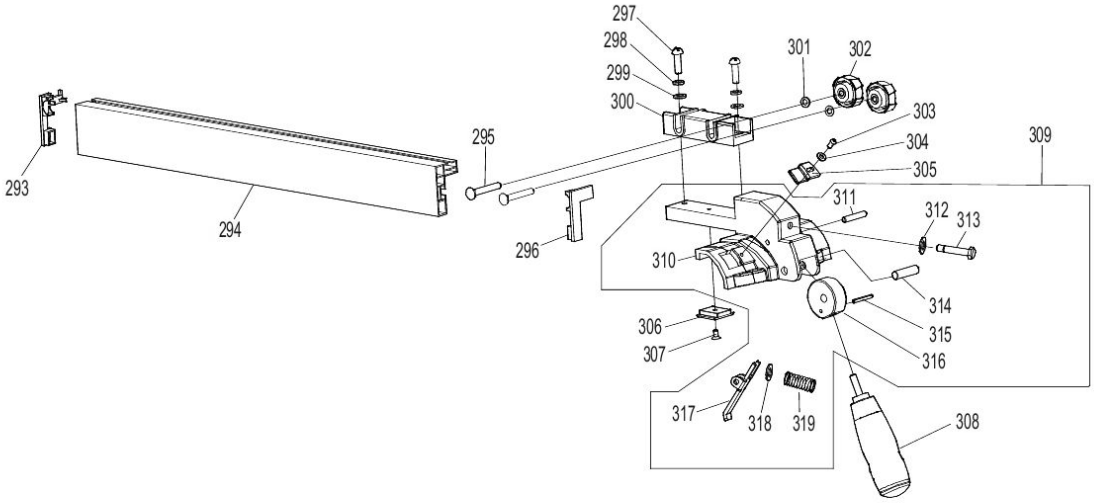

2019/10
MLT100N 5/6

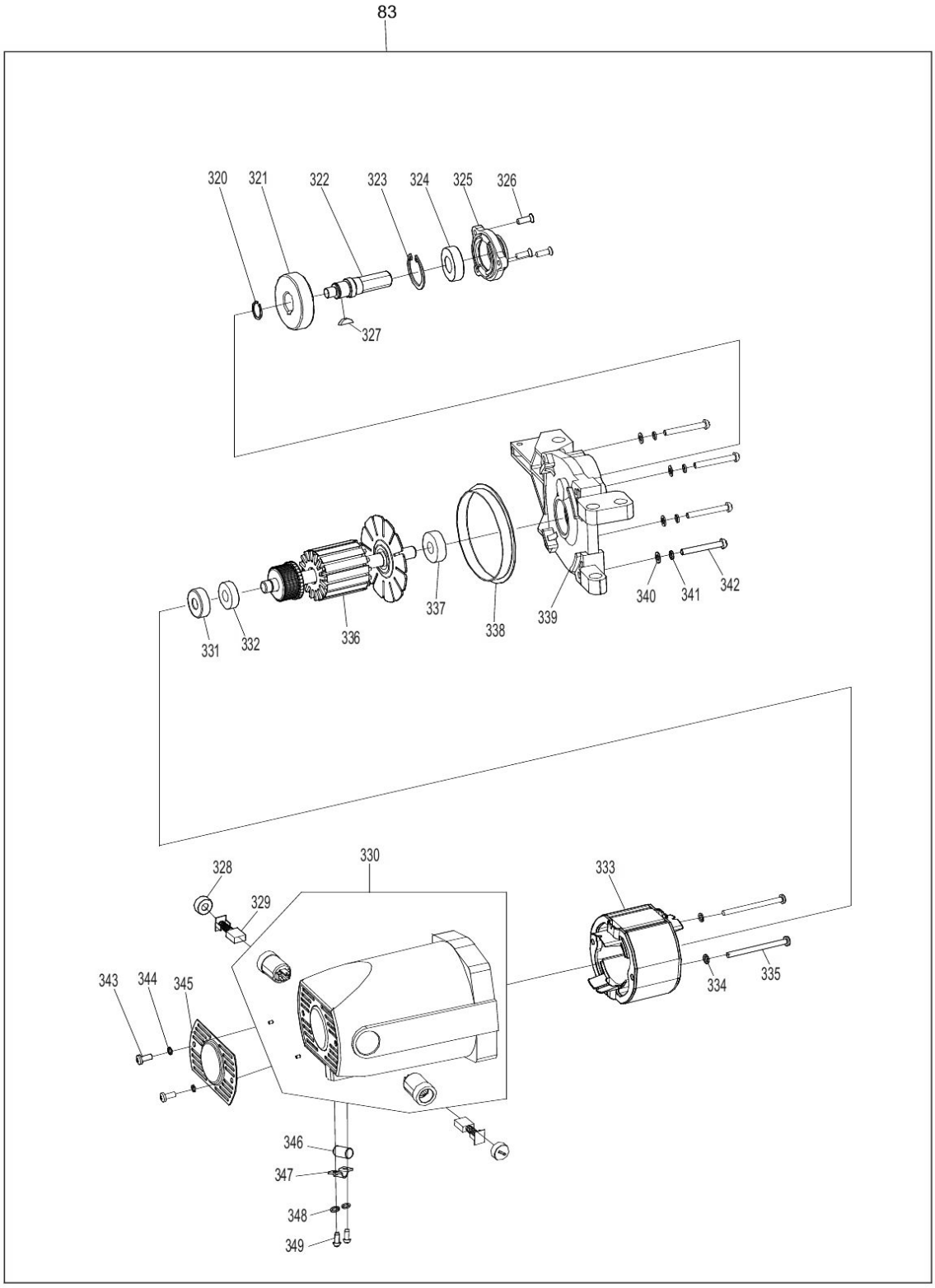

2019/10
MLT100N 6/6