Partdrawing for DUR368LZ - Controleunit

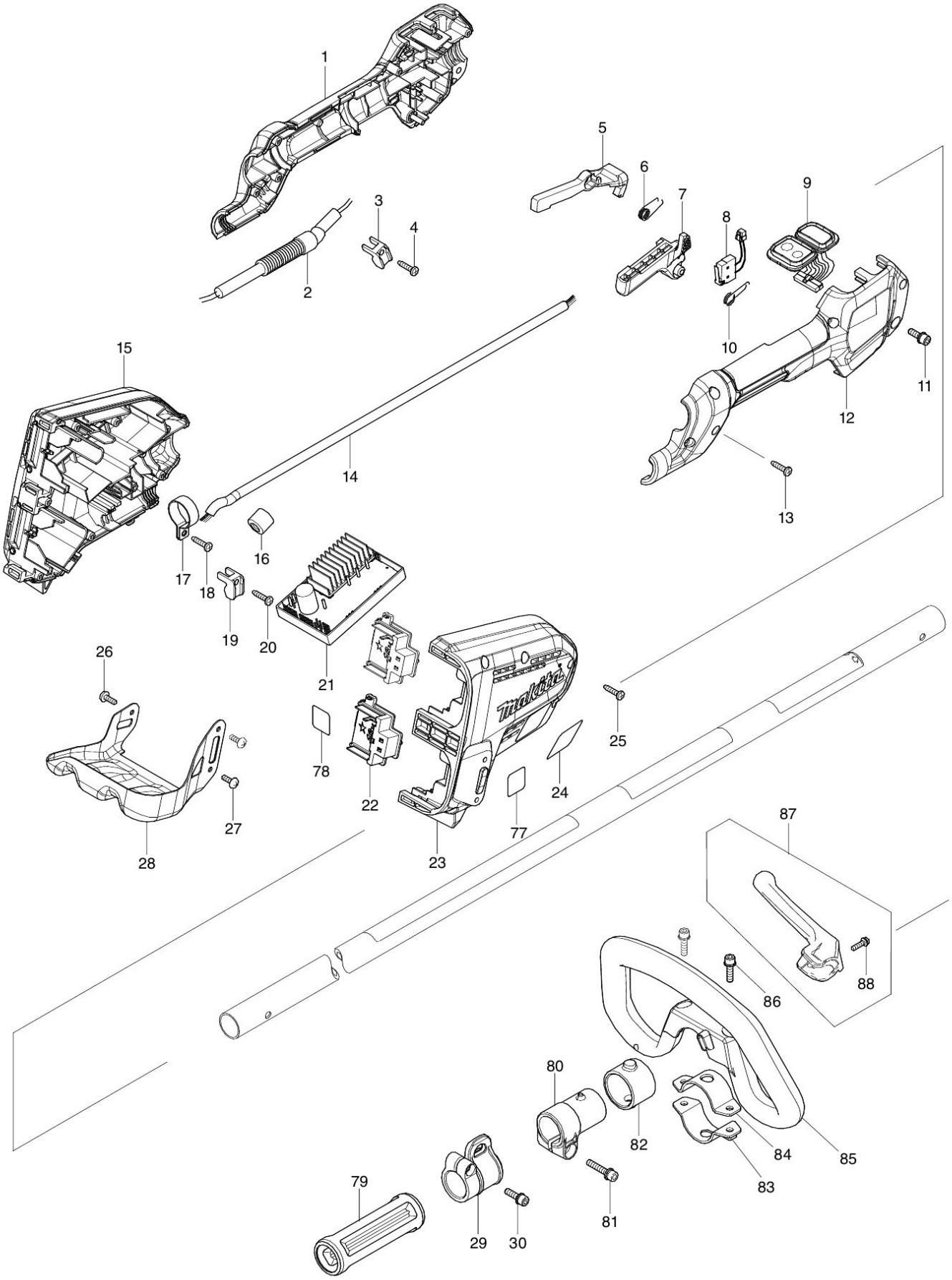

2019/01
DUR368L 1/2
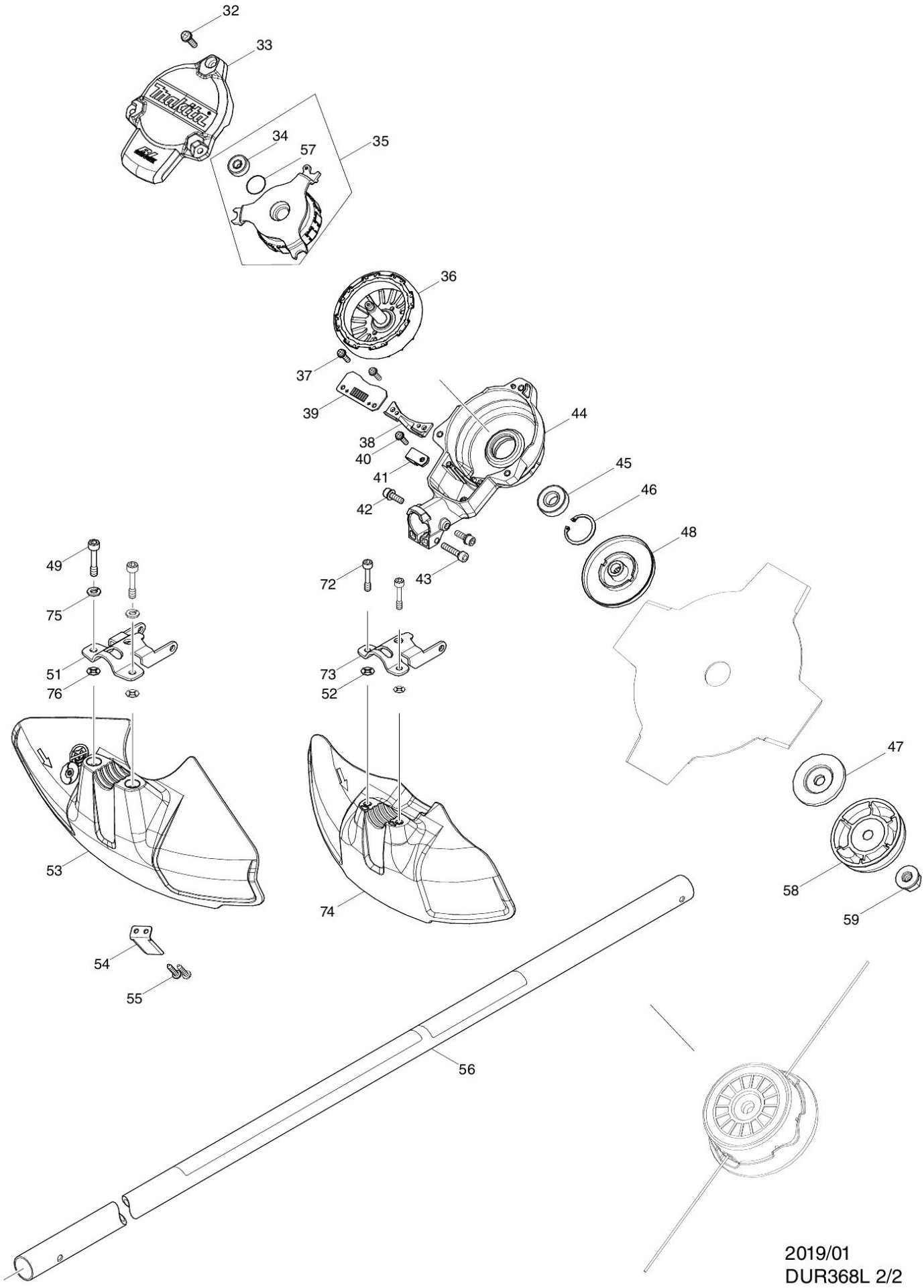
Partdrawing for DUR368LZ - Steel & Maaikop