Partdrawing for DLM533PT4 - Pagina 1_Duwboom

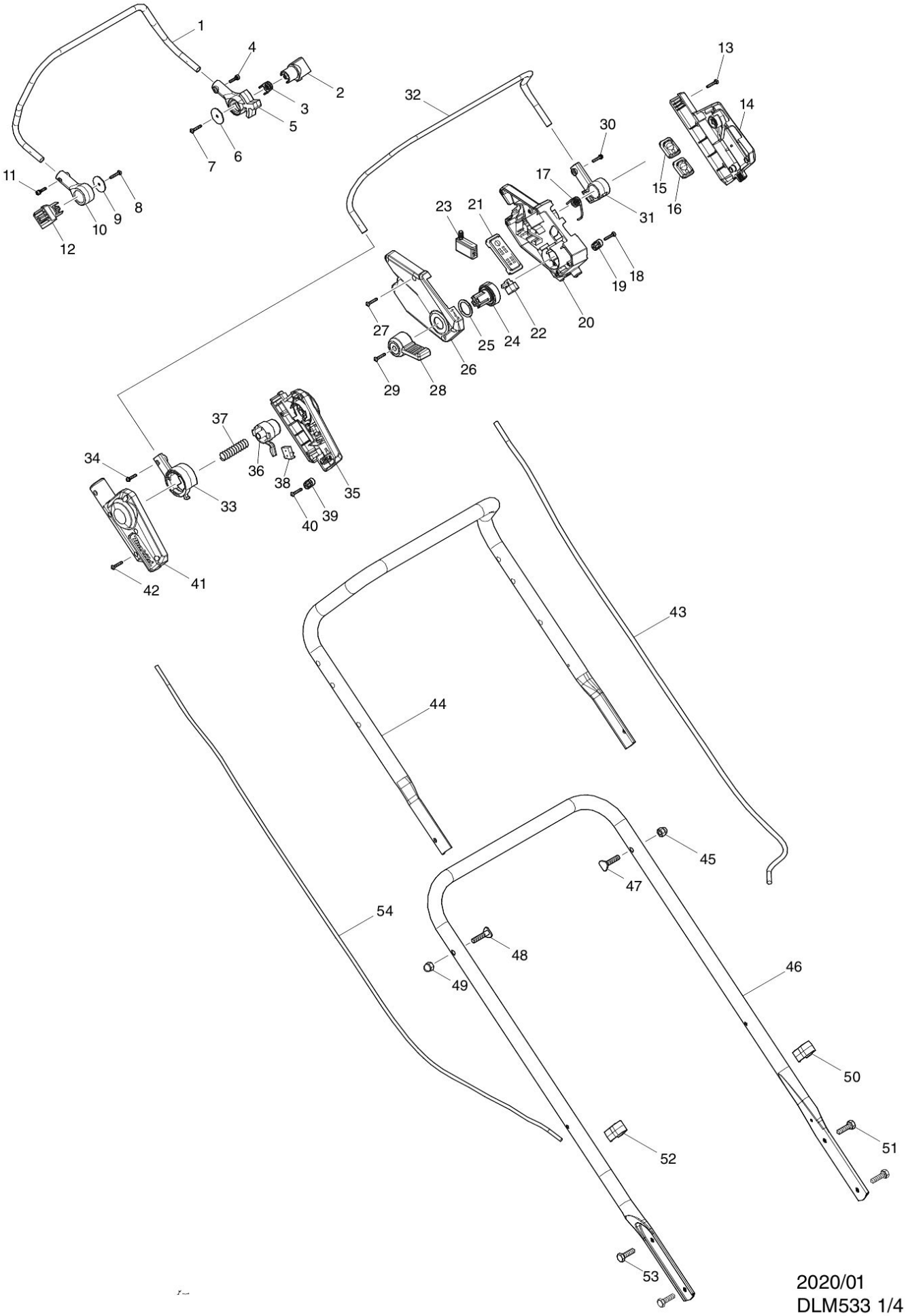

Partdrawing for DLM533PT4 - Pagina 2_Motorhuis & Motor

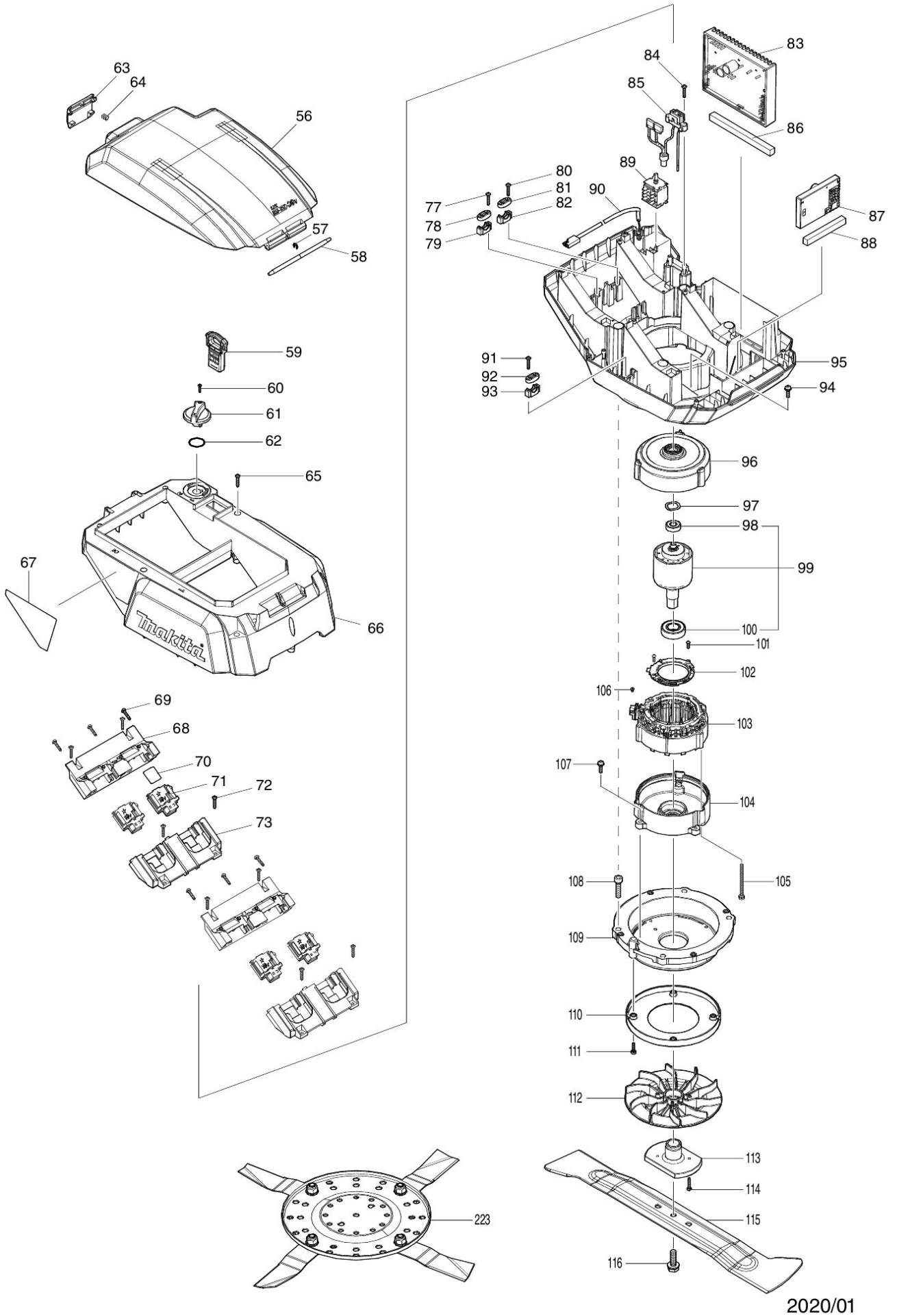

Partdrawing for DLM533PT4 - Pagina 3_Maaidek

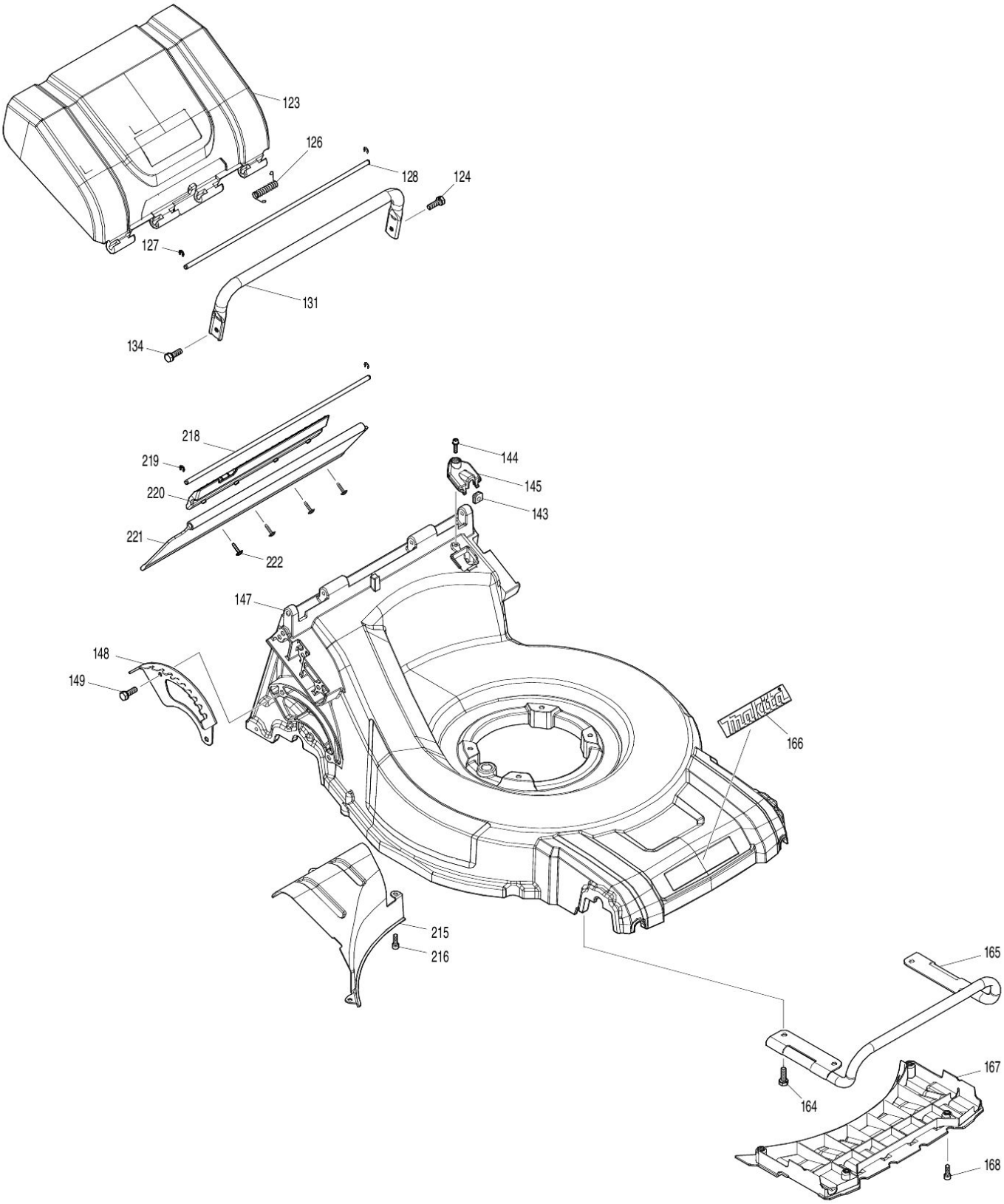

2020/01
DLM533 3/4

Partdrawing for DLM533PT4 - Pagina 4_Aandrijving

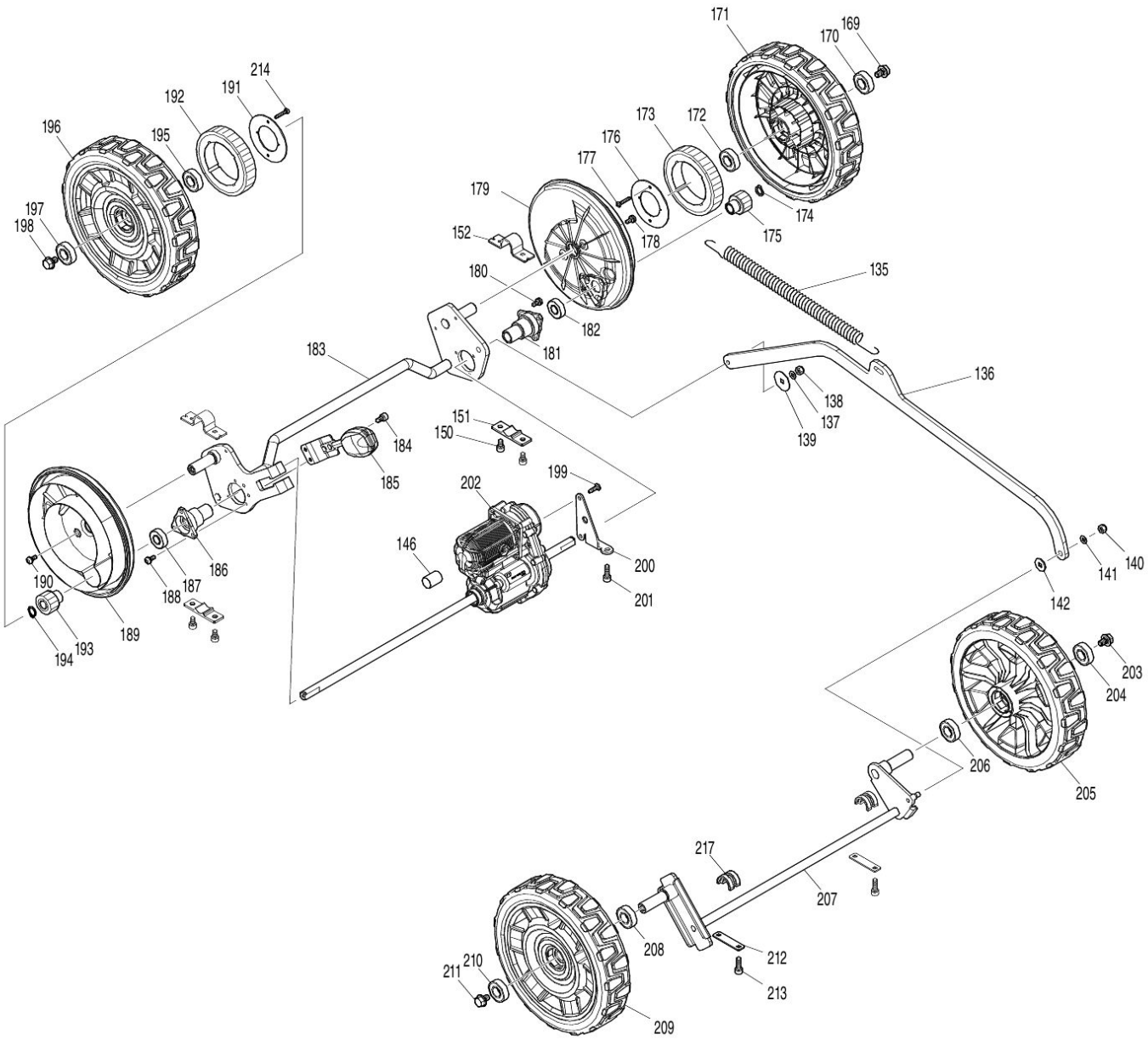

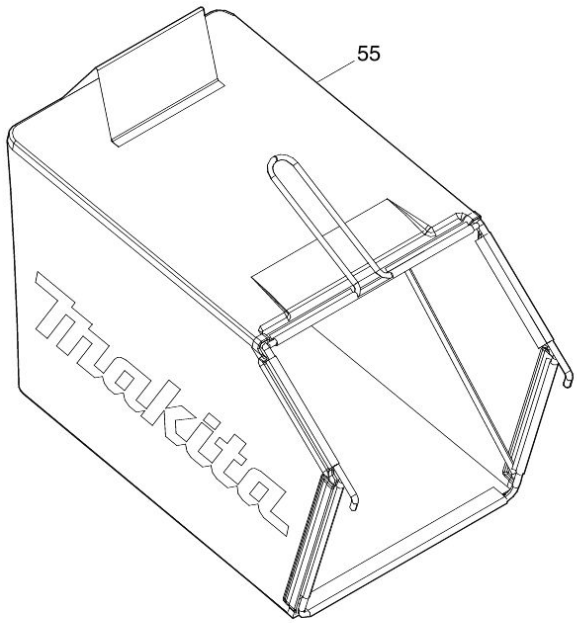

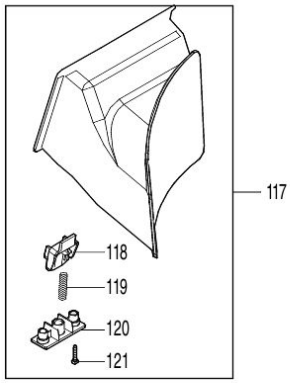

2020/01
DLM533 4/4